YANMAR

PARTS CATALOG

0CW10-M47000EN

Last update Apr., 2019

PREFACE

1. This Parts Catalog carries all parts incorporated in YANMAR Model 3TNM68-HGEP engine manufactured since October, 2008.

2. Each illustration corresponds to the parts list on the following page.

3. When ordering parts, clearly write down the engine model and serial number, as well as the name and number of each part in your order sheet. This will help insure reliable delivery of the parts you have ordered.

Directions for the Parts Catalog.

1.This Parts Catalog shows both standard and optional parts.
2.Parts may change without prior notice.
3.The following is an example of the Parts Catalog format.

0CF10-G21601 29. FUEL INJECTION PUMP(W/BOOST)

(A)=4JH-DT
(B)=4JH-DTZ
(C)=4JH-DTZP
(D)=4JH-DTZA
(E)=4JH-DTZY
(F)=

① REF.	② LEV.	PARTS NO.	DESCRIPTION	Q'TY (A)	(B)	(C)	(D)	(E)	(F)	③ I	⑤ R
1	1	729595-51390	FUEL INJECTION PUMP	1	1	1	1	1			1
1-1	1	729595-51391	FUEL INJECTION PUMP	1	1	1	1	1		N	1
	(A=E00185)	(B=E00200)									
3	2	26022-060162	SCREW M 6X 16	9	9	9	9	9			
3-1 ④	2	26022-060162	SCREW M 6X 16	4	4	4	4	4		K	
	(A=E00156)	(B=E00156)	(C=E00156) (D=E00156)	(E=E00156)							
4	2	129470-51040	CAMSHAFT	1	1	1	1	1			
5	2	122710-51050	BEARING, ROLLER	2	2	2	2	2			
6	2	129470-51060	RETAINER	1	1	1	1	1			

Remarks
(1) BOOST COMPEMSATOR TYPE. OPTIONAL PART, TO E00155,(4JH-DT, 4JH-DTZ

①Ref. No.

The Ref. No. listed may not be in accordance with the illustration Ref. No.

(Ex.) Illustration No. 1 List Ref No. 1 (Before change) → 1- 1 (After change)

For interchangeable symbols N, R and K, illustrations for new parts may be abbreviated.

②Lev. (Level)

Level indication
The numbers below indicate the level of relativity towards the main part.
1 ----- Main parts (Assembly parts)
2 ----- Sub component included in " 1 ".
3 ----- Sub component included in " 2 ".
Note) Parts that are not for sale are partially illustrated but not listed.

③Interchangeability Symbol

When a part change takes place, one of the following interchangeability symbols is indicated beside the part.

Symbol	Interchangeability	Contents note
N	Old ← Yes / No → New	New Part is interchangeable for Old Part but Old Part is not interchangeable for New Part.
Q	Old ← No / Yes → New	New Part is not interchangeable for Old Part but Old Part is interchangeable for New Part.
R	Old ← Yes / Yes → New	New/ Old Parts are both interchangeable.
S	Old ← No / No → New	New/ Old Parts are both not interchangeable.
W		Part newly added.
Z		Part discontinued.
F		Not interchangeable by a single part but interchangeable together with related parts.
K		Changes only for used parts quantities.

④Effective Machine No.

When a part changes, the effective Machine No. will be indicated in the (A)-(F) column.

Product Symbol	Product No.	Product Symbol	Product No.
C	Clutch No. Compressor No.	F	Machine No. (Agricultural Equip.)
D	Drive No.	M	Machine No.
E	Engine No.		

Note 1) A date may follow the symbol. (Ex.) 1996.01
Note 2) " XXXXX " and " ZZZZZ " are for parts that could not be predicted or for engine models that could not be identified.
Note 3) (A=E00185) is the E (Engine Serial Number) for the column (A) model (in this case 4JH-DT) after the parts design change.

⑤Remarks

Figures or alphabets (symbols) are entered in the remarks column.
The comments (remarks) on parts that are indicated at the bottom of the illustration are the same symbols as those stated above.

Contents

0CW10-M47000

Fig. No.	Fig. Name	Fig. No.	Fig. Name
3TNM68-HGEP			
1.	CYLINDER BLOCK		
2.	GEAR HOUSING		
3.	FLYWHEEL HOUSING & OIL SUMP		
4.	CYLINDER HEAD & BONNET		
5.	EXHAUST MANIFOLD		
6.	CAMSHAFT & DRIVING GEAR		
7.	CRANKSHAFT & PISTON		
8.	LUB.OIL SYSTEM		
9.	COOLING WATER SYSTEM		
10.	FUEL INJECTION PUMP		
11.	GOVERNOR		
12.	FUEL INJECTION VALVE		
13.	FUEL LINE		
14.	STARTING MOTOR		
15.	GENERATOR		
17.	(15A)GENERATOR		
16.	GASKET SET		

Fig.1. CYLINDER BLOCK

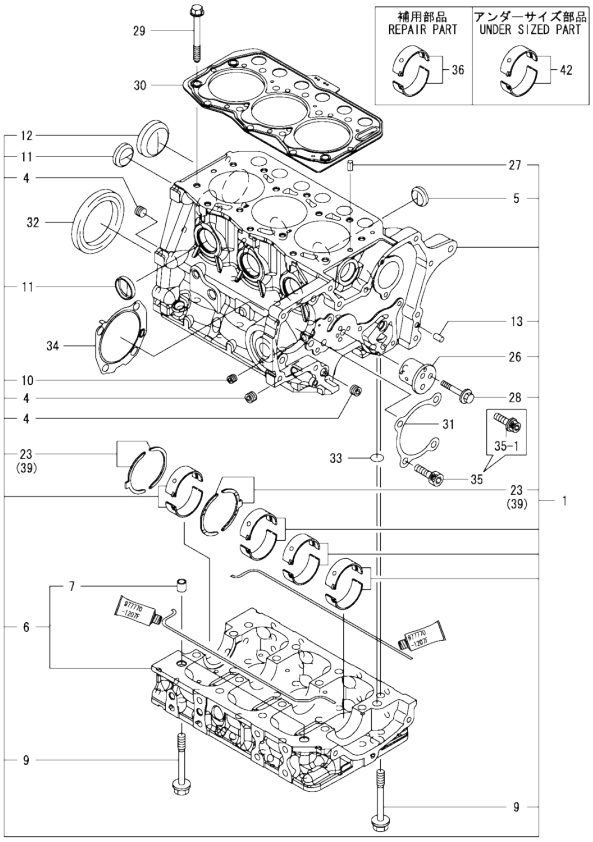

Remarks
(1) REPAIR PART.
(2) OVER-SIZED(O.S=0.25)PART.
(3) UNDER-SIZED(U.S=0.25)PART.

(A)=3TNM68-HGEP (D)=
(B)= (E)=
(C)= (F)=

No.	Lev.	Parts No.	Description	Q'ty (A)	(B)	(C)	(D)	(E)	(F)	I	R
1	1	119127-01560	BLOCK ASSY, CYLINDER	1							
4	2	124060-01050	PLUG, PT1/8	3							
5	2	119125-01970	PLUG, 25	3							
6	2	119125-02000	FRAME ASSY, PIPE	1							
7	3	119125-01960	PIPE, KNOCK	2							
9	2	119125-02061	BOLT, METAL CAP	16							
10	2	23876-005000	PLUG, R005	1							
11	2	27241-300000	PLUG 30	4							
12	2	27241-450000	PLUG, 45	1							
13	2	119620-01620	PIN, M6X10	2							
23	2	119125-02930	BEARING, THRUST	2							
26	2	119125-25050	SHAFT, IDLE GEAR	1							
27	2	22351-060012	PIN, SPRING 6.0X12	2							
28	2	26106-060402	BOLT, M6X 40 PLATED	3							
29	1	119266-01200	BOLT, HEAD	14							
30	1	119125-01330	GASKET, HEAD	1							
31	1	119125-01790	GASKET	1							
32	1	119734-02220	SEAL, OIL	1							
33	1	129900-32040	O-RING, P14	1							
34	1	119125-51800	GASKET	1							
35	1	26450-080252	BOLT, M8X 25	4							
35-1	1	119125-01800	BOLT	4						N	
	(A=EZZZZZ)										
36	1	119125-02900	BEARING, MAIN	4							1
39	1	119125-02940	BEARING, THRUST 0.25	2							2
42	1	119125-02910	BEARING, 0.25 US	4							3

N:Old $\frac{\text{Yes}}{\text{No}}$ New. Q:Old $\frac{\text{No}}{\text{Yes}}$ New. R:Old $\frac{\text{Yes}}{\text{Yes}}$ New. S:Old $\frac{\text{No}}{\text{No}}$ New. W:Add. Z:Discontinued. F:Interchangeable by set. K:Q'ty Change

Copyright (C) YANMAR CO., LTD. All RightsReserved.

Fig.2. GEAR HOUSING

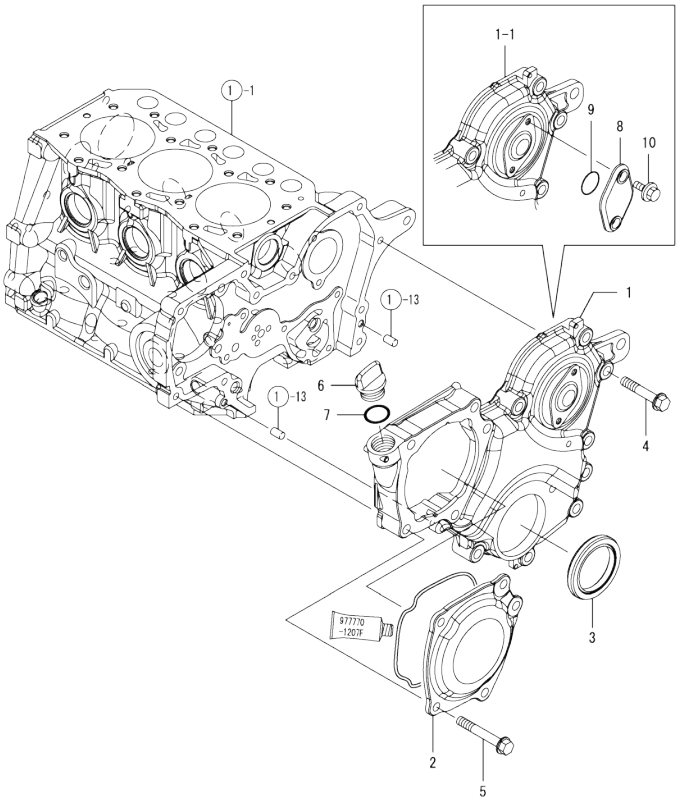

(A)=3TNM68-HGEP (D)=
(B)= (E)=
(C)= (F)=

No.	Lev.	Parts No.	Description	Q'ty (A)	(B)	(C)	(D)	(E)	(F)	I	R
1	1	119125-01500	COVER, GEAR CASE	1							
1-1	1	119125-01540	CASE, GEAR	1						N	
	(A=*2008.12.)										
2	1	119125-01750	COVER	1							
3	1	119717-01800	SEAL, OIL	1							
4	1	26106-080352	BOLT, M8X 35 PLATED	8							
5	1	26106-080452	BOLT, M8X 45 PLATED	5							
6	1	106760-01770	CAP	1							
7	1	24311-000180	O-RING, 1AP18.0	1							
8	1	121023-01551	COVER	1						W	
	(A=*2008.12.)										
9	1	24341-000240	O-RING, 1AS24.0	1						W	
	(A=*2008.12.)										
10	1	26106-060162	BOLT, M6X 16 PLATED	2						W	
	(A=*2008.12.)										

N:Old ←Yes/No→ New. Q:Old ←No/Yes→ New. R:Old ←Yes/Yes→ New. S:Old ←No/No→ New. W:Add. Z:Discontinued. F:Interchangeable by set. K:Q'ty Change

Copyright (C) YANMAR CO., LTD. All RightsReserved.

Fig.3. FLYWHEEL HOUSING & OIL SUMP

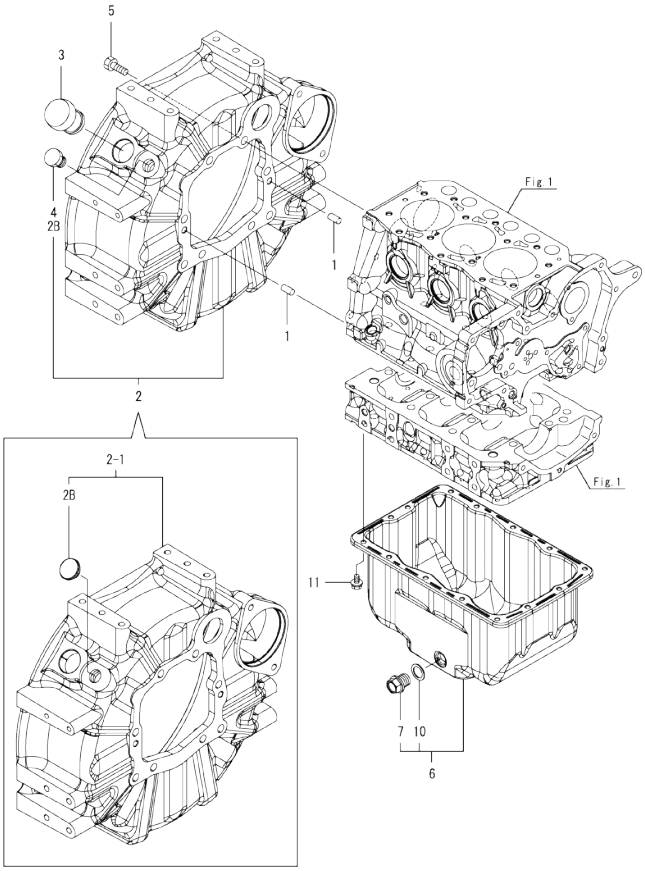

Remarks
(1)Fig.7 No.8-1 & Fig.14 No.1-1 interchangeable by set.

(A)=3TNM68-HGEP (D)=
(B)= (E)=
(C)= (F)=

No.	Lev.	Parts No.	Description	Q'ty (A)	(B)	(C)	(D)	(E)	(F)	I	R
1	1	129100-01580	PIN, PARALLEL 8X16	2							
2	1	119128-01670	HOUSING ASSY, WHEEL	1							
2-1	1	119D00-01610	HOUSING ASSY, WHEEL	1						F	1
2B	(A=E023888) 2 (A=*2013.05.)	119888-01850	PLUG, RUBBER 19	1						W	
3	1	119620-01750	CAP, WHEEL COVER	1							
4	1	129486-35210	PLUG, 3/4-16UNF	1							
4-1	1	119888-01850	PLUG, RUBBER 19	1						R	
4-2	(A=E002133) 1 (A=*2013.05.)	119888-01850	PLUG, RUBBER 19	1						Z	
5	1	26206-100252	BOLT, M10X 25 PLATED	8							
6	1	119125-01760	OIL PAN ASSY	1							
7	2	105425-01690	PLUG, DRAIN M16	1							
10	2	22190-160002	WASHER, SEAL 16	1							
11	1	119125-01780	BOLT, TORX M6X10	14							

N:Old ←Yes/No→ New. Q:Old ←No/Yes→ New. R:Old ←Yes/Yes→ New. S:Old ←No/No→ New. W:Add. Z:Discontinued. F:Interchangeable by set. K:Q'ty Change

Copyright (C) YANMAR CO., LTD. All RightsReserved.

Fig.4. CYLINDER HEAD & BONNET

(A)=3TNM68-HGEP
(B)=
(C)=
(D)=
(E)=
(F)=

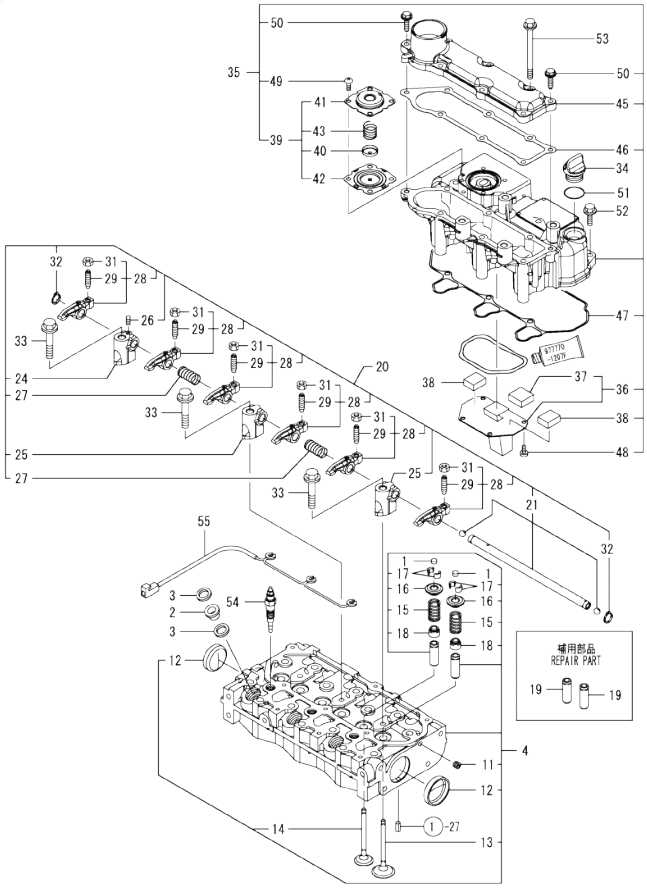

No.	Lev.	Parts No.	Description	Q'ty (A)	(B)	(C)	(D)	(E)	(F)	I	R
1	1	119260-11370	CAP, VALVE	6							
2	1	129901-11450	PROTECTOR, NOZZLE	3							
3	1	119600-11460	GASKET, NOZZLE	6							
4	1	119125-11740	HEAD ASSY, CYLINDER	1							
11	2	23876-005000	PLUG, R005	1							
12	2	27241-350000	PLUG, 35	2							
13	2	119125-11100	VALVE, INTAKE	3							
14	2	119125-11110	VALVE, EXHAUST	3							
15	2	119125-11130	SPRING, VALVE	6							
16	2	119125-11180	RETAINER, SPRING	6							
17	2	119125-11190	COTTER	12							
18	2	119125-11340	SEAL, VALVE STEM	6							
19	1	119125-11800	GUIDE, VALVE	6							1
20	1	119125-11200	SUPPORT ASSY, ARM	1							
21	2	119125-11240	SHAFT ASSY, ROCKER	1							
24	2	119125-11260	SUPPORT, ROCKER ARM	1							
25	2	119125-11270	SUPPORT, ROCKER ARM	2							
26	2	119260-11270	SCREW	1							
27	2	119260-11280	SPRING	2							
28	2	119125-11650	ARM, ROCKER	6							
29	3	105010-11230	SCREW, VALVE ADJUST	6							
31	3	26856-060002	NUT, M6	6							
32	2	22242-000100	RING, 10	2							
33	1	26106-080452	BOLT, M8X 45 PLATED	3							
34	1	106760-01770	CAP	1							
35	1	119125-11380	BONNET ASSY, HEAD	1							
36	2	119717-03031	PLATE	1							
37	3	119717-03070	BAFFLE, BREATHER	1							
38	2	119717-03070	BAFFLE, BREATHER	2							
39	2	119802-03100	DIAPHRAGM ASSY	1							
40	3	119802-03110	PLATE	1							
41	3	119802-03121	COVER, DIAPHRAGM	1							
42	3	119802-03131	DIAPHRAGM	1							
43	3	119802-03141	SPRING, DIAPHRAGM	1							
45	2	119125-11320	COVER, BONNET	1							
46	2	119125-11330	GASKET	1							
47	2	119125-11370	GASKET, BONNET	1							
48	2	22857-500100	SCREW, 5X10	4							
49	2	22857-500100	SCREW, 5X10	4							
50	2	26476-060202	SCREW, TAPPING M6X20	2							
51	1	24311-000180	O-RING, 1AP18.0	1							
52	1	26106-060202	BOLT, M6X 20 PLATED	3							
53	1	26106-060802	BOLT, M6X 80 PLATED	6							
54	1	119125-77800	PLUG, GLOW	3							
55	1	119125-77820	CONNECTOR, GLOW PLUG	1							

Remarks
(1) REPAIR PART.

N:Old $\frac{\text{Yes}}{\text{No}}$ New. Q:Old $\frac{\text{No}}{\text{Yes}}$ New. R:Old $\frac{\text{Yes}}{\text{Yes}}$ New. S:Old $\frac{\text{No}}{\text{No}}$ New. W:Add. Z:Discontinued. F:Interchangeable by set. K:Q'ty Change

Copyright (C) YANMAR CO., LTD. All RightsReserved.

Fig.5. EXHAUST MANIFOLD

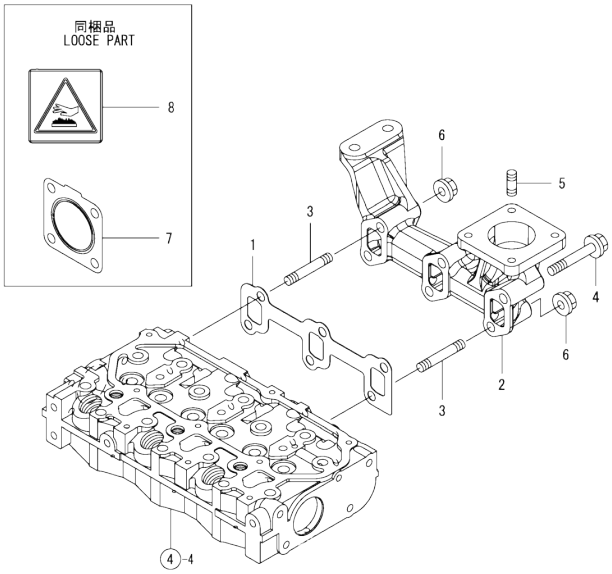

(A)=3TNM68-HGEP (D)=
(B)= (E)=
(C)= (F)=

No.	Lev.	Parts No.	Description	Q'ty (A)	(B)	(C)	(D)	(E)	(F)	I	R
1	1	119125-13110	GASKET	1							
2	1	119125-13140	MANIFOLD, EXHAUST	1							
3	1	119717-13600	STUD, M8X50	2							
4	1	119802-13620	BOLT, M8X50	4							
5	1	119131-18320	STUD, M8X22	4							
6	1	26306-080002	NUT, M8	2							
7	1	119515-13200	GASKET, SILENCER	1							
8	1	114220-07130	LABEL, HOT SURFACE	1						W	
	(A=EXXXXX)										

N:Old $\xleftarrow[\text{No}]{\text{Yes}}$ New. Q:Old $\xleftarrow[\text{Yes}]{\text{No}}$ New. R:Old $\xleftarrow[\text{Yes}]{\text{Yes}}$ New. S:Old $\xleftarrow[\text{No}]{\text{No}}$ New. W:Add. Z:Discontinued. F:Interchangeable by set. K:Q'ty Change

Copyright (C) YANMAR CO., LTD. All RightsReserved.

Fig.6. CAMSHAFT & DRIVING GEAR

(A)=3TNM68-HGEP
(B)=
(C)=
(D)=
(E)=
(F)=

No.	Lev.	Parts No.	Description	Q'ty (A)	(B)	(C)	(D)	(E)	(F)	I	R
1	1	119260-14200	TAPPET	6							
2	1	119260-14400	ROD, PUSH	6							
3	1	119125-14580	CAMSHAFT ASSY	1							
8	1	26106-060122	BOLT, M6X 12 PLATED	2							
9	1	119125-25100	GEAR ASSY, IDLE	1							
12	1	119125-25910	BUSH, IDLE GEAR	1							1
13	1	129150-25301	BOLT	4							
14	1	119125-25930	GEAR, PUMP	1							
15	1	119717-51150	FLANGE	1							
16	1	22217-120000	WASHER, SPRING 12	1							
17	1	26716-120002	NUT, M12	1							

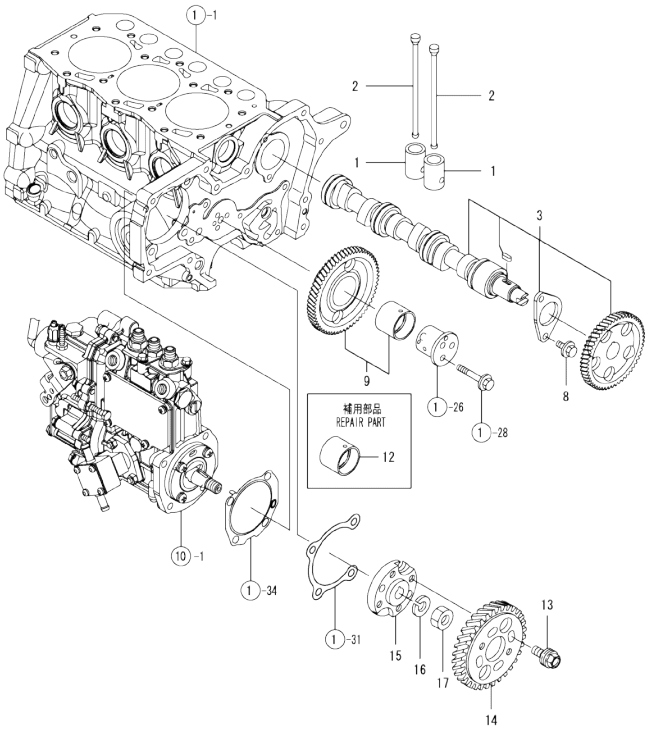

Remarks
(1) REPAIR PART.

N:Old $\frac{\text{Yes}}{\text{No}}$ New. Q:Old $\frac{\text{No}}{\text{Yes}}$ New. R:Old $\frac{\text{Yes}}{\text{Yes}}$ New. S:Old $\frac{\text{No}}{\text{No}}$ New. W:Add. Z:Discontinued. F:Interchangeable by set. K:Q'ty Change

Copyright (C) YANMAR CO., LTD. All RightsReserved.

Fig.7. CRANKSHAFT & PISTON

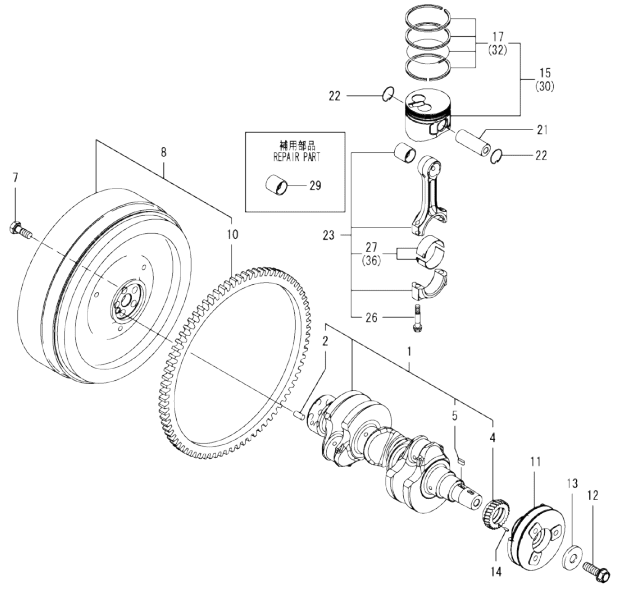

(A)=3TNM68-HGEP
(B)=
(C)=
(D)=
(E)=
(F)=

No.	Lev.	Parts No.	Description	Q'ty (A)	(B)	(C)	(D)	(E)	(F)	I	R
1	1	119125-21700	CRANKSHAFT ASSY	1							
2	2	129100-01580	PIN, PARALLEL 8X16	1							
4	2	119125-21200	GEAR, CRANKSHAFT	1							
5	2	22512-040120	KEY, 4X 12	1							
7	1	121111-21501	BOLT, FLYWHEEL	5							
8	1	119128-21591	FLYWHEEL ASSY	1							
8-1	1	119D00-21580	FLYWHEEL ASSY	1						F	4
	(A=E023888)										
10	2	119865-21600	GEAR, RING Z=116	1							
11	1	119125-21650	V-PULLEY, CRANKSHAFT	1							
12	1	119621-21680	BOLT, FLANGE 12X1.25	1							
13	1	119620-21941	WASHER, 12	1							
14	1	22351-030010	PIN, SPRING 3.0X10	1							
15	1	119125-22080	PISTON ASSY	3							
17	2	119125-22500	RING SET, PISTON	3							
21	1	119125-22300	PIN, PISTON	3							
22	1	22252-000200	RING, 20	6							
23	1	119125-23000	ROD ASSY, CONNECTING	3							
26	2	119717-23200	BOLT, CONNECTING ROD	6							
27	2	119515-23601	METAL ASSY,CRANK PIN	3							
29	1	119260-23910	METAL, PISTON PIN	3							1
30	1	119125-22900	PISTON ASSY, 0.25 OS	3							2
32	2	119125-22550	RING SET, PISTON .25	3							2
36	1	119515-23611	METAL ASSY, PIN .25	3							3

Remarks
(1)Spare parts.
(2)Over-sized(O.S.=0.25) parts.
(3)Under-sized(U.S.=0.25) parts.
(4)Fig.3 No.2-1 & Fig.14 No.1-1 interchangeable by set.

N:Old ◄Yes/No► New. Q:Old ◄No/Yes► New. R:Old ◄Yes/Yes► New. S:Old ◄No/No► New. W:Add. Z:Discontinued. F:Interchangeable by set. K:Q'ty Change

Copyright (C) YANMAR CO., LTD. All RightsReserved.

Fig.8. LUB.OIL SYSTEM

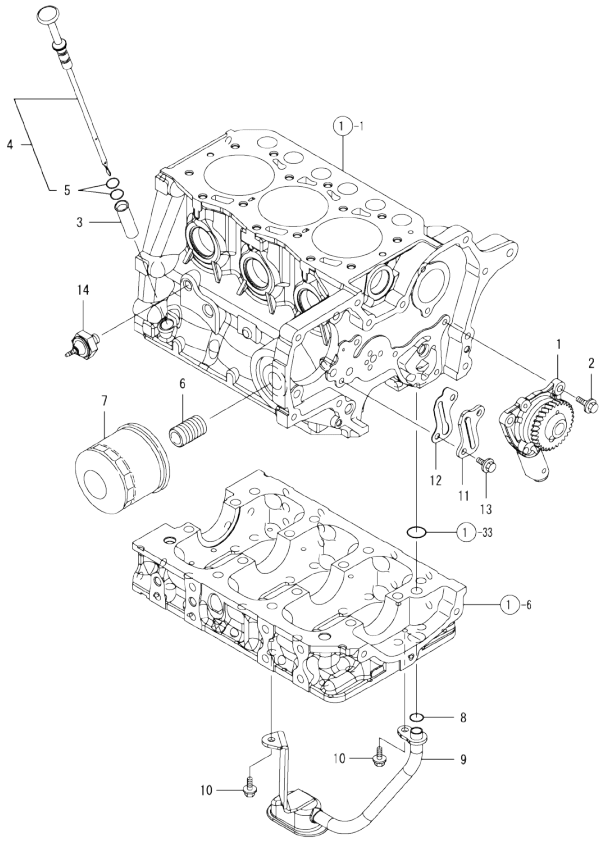

Remarks
(1) REPAIR PART.

(A)=3TNM68-HGEP (D)=
(B)= (E)=
(C)= (F)=

No.	Lev.	Parts No.	Description	Q'ty (A)	(B)	(C)	(D)	(E)	(F)	I	R
1	1	119125-32000	PUMP ASSY, OIL	1							
2	1	26106-060142	BOLT, M6X 14 PLATED	3							
3	1	119125-34810	GUIDE, DIPSTICK	1							
4	1	119125-34820	DIPSTICK, OIL	1							
5	2	119125-34900	O-RING	1							
6	1	129100-35140	STUD	1							
7	1	119305-35170	FILTER ASSY, D68XL65	1							1
8	1	119209-35030	O-RING, P11	1							
9	1	119128-35080	PIPE ASSY, OIL INLET	1							
10	1	26106-060102	BOLT, M6X 10 PLATED	2							
11	1	119125-39200	COVER	1							
12	1	119125-39220	GASKET	1							
13	1	26106-060102	BOLT, M6X 10 PLATED	2							
14	1	114250-39450	SWITCH, 0.5KG	1							

N:Old ←Yes/No→ New. Q:Old ←No/Yes→ New. R:Old ←Yes/Yes→ New. S:Old ←No/No→ New. W:Add. Z:Discontinued. F:Interchangeable by set. K:Q'ty Change

Copyright (C) YANMAR CO., LTD. All RightsReserved.

Fig.9. COOLING WATER SYSTEM

(A)=3TNM68-HGEP
(B)=
(C)=
(D)=
(E)=
(F)=

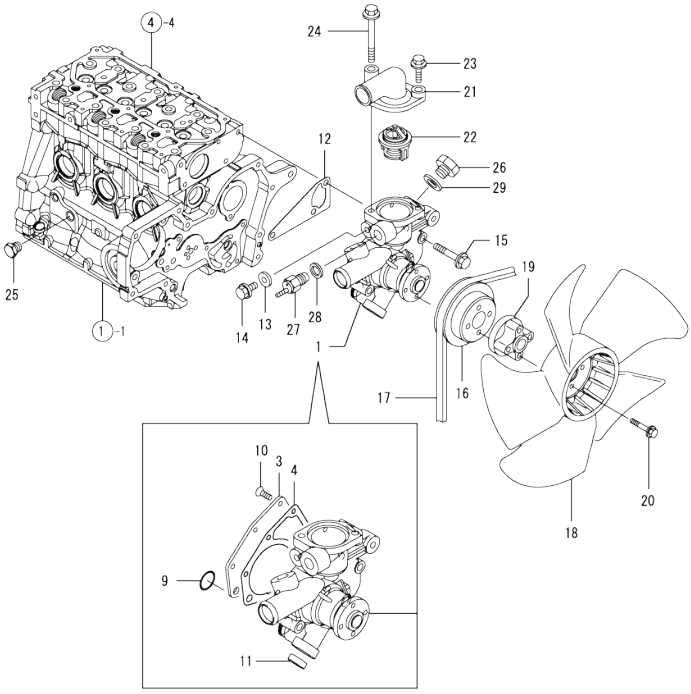

No.	Lev.	Parts No.	Description	Q'ty (A)	(B)	(C)	(D)	(E)	(F)	I	R
1	1	119125-42000	PUMP ASSY, WATER	1							
3	2	119125-42020	COVER	1							
4	2	119125-42030	GASKET, WATER PUMP	1							
9	2	119209-42320	O-RING, P21 EPDM	1							
10	2	26577-060122	SCREW, M6X12	4							
11	2	27241-220000	PLUG, 22	1							
12	1	119260-42021	GASKET, WATER PUMP	1							
13	1	23414-080000	GASKET, 8X1.0	1							
14	1	26106-080122	BOLT, M8X 12 PLATED	1							
15	1	26106-080452	BOLT, M8X 45 PLATED	3							
16	1	119740-42350	V-PULLEY, D=90	1							
17	1	25132-003400	V-BELT, A34	1							
18	1	119265-44740	FAN, D=310X5F	1							
19	1	129457-44760	SPACER, FAN	1							
20	1	26106-060452	BOLT, M6X 45 PLATED	4							
21	1	124101-49531	COVER, THERMOSTAT	1							
22	1	119717-49800	THERMOSTAT, 71	1							
23	1	26106-080252	BOLT, M8X 25 PLATED	1							
24	1	26106-080652	BOLT, M8X 65 PLATED	1							
25	1	171056-49120	PLUG, DRAIN	1							
26	1	121450-42450	PLUG, M16	1							
27	1	121250-44901	SWITCH, 110	1							
28	1	124465-44950	GASKET, 16	1							
29	1	124465-44950	GASKET, 16	1							

N:Old ◄Yes/No► New. Q:Old ◄No/Yes► New. R:Old ◄Yes/Yes► New. S:Old ◄No/No► New. W:Add. Z:Discontinued. F:Interchangeable by set. K:Q'ty Change

Copyright (C) YANMAR CO., LTD. All RightsReserved.

Fig.10. FUEL INJECTION PUMP

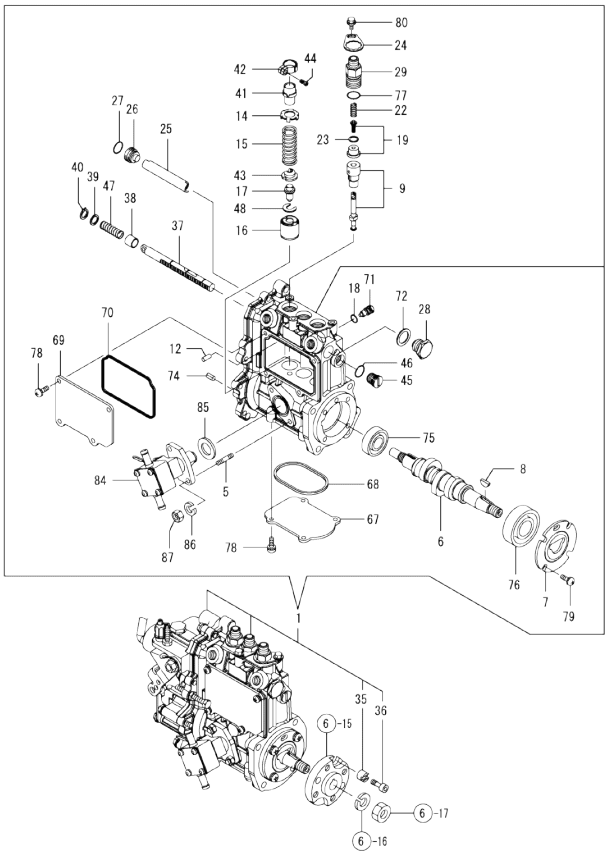

Remarks
(1) GOVERNOR ASSY(FIG.11) IS INCORPORATED IN THIS FOP.CMP (REF.NO.1).

(A)=3TNM68-HGEP
(B)=
(C)=
(D)=
(E)=
(F)=

No.	Lev.	Parts No.	Description	Q'ty (A)	(B)	(C)	(D)	(E)	(F)	I	R
1	1	719128-51300	PUMP ASSY, INJECTION	1							1
5	2	129155-51020	STUD	2							
6	2	119125-51030	CAMSHAFT	1							
7	2	119125-51060	RETAINER, BEARING	1							
8	2	122710-51090	KEY	1							
9	2	119125-51100	PLUNGER ASSY	3							
12	2	129155-51140	PIN	3							
14	2	158600-51170	RETAINER, SPRING	3							
15	2	119717-51190	SPRING, PLUNGER	3							
16	2	119125-51241	TAPPET	3							
17	2	119125-51250	GUIDE, TAPPET	3							
18	2	129155-51280	O-RING, S6	1							
19	2	119125-51300	VALVE ASSY, DELIVERY	3							
22	2	128990-51330	SPRING, DELIVERY	3							
23	2	124550-51350	GASKET, DELIVERY	3							
24	2	118400-51370	LOCKING	3							
25	2	129155-51400	DEFLECTOR	1							
26	2	158600-51410	PLUG, DEFLECTOR	1							
27	2	119717-51420	O-RING	1							
28	2	158600-51420	PLUG, DEFLECTOR	1							
29	2	158600-51442	VALVE ASSY, DELIVERY	3							
35	2	119125-51480	COLLAR	1							
36	2	119125-51490	BOLT	1							
37	2	119717-51500	RACK, CONTROL	1							
38	2	129155-51521	BUSH, RACK	1							
39	2	129155-51530	SPACER	1							
40	2	129155-51540	CIRCLIP	1							
41	2	129155-51550	PINION, CONTROL	3							
42	2	129100-51560	PINION	3							
43	2	119717-51570	RETAINER, SPRING	3							
44	2	129100-51570	SCREW	3							
45	2	158600-51570	PLUG	1							
46	2	129155-51580	O-RING	1							
47	2	129155-51591	SPRING, RACK	1							
48	2	129155-51600	SHIM SET, ADJUSTING	3							
67	2	119125-51700	COVER	1							
68	2	119717-51711	GASKET	1							
69	2	119717-51750	COVER	1							
70	2	119717-51761	GASKET	1							
71	2	158600-51790	STOOPER, RACK	1							
72	2	22190-160002	WASHER, SEAL 16	1							
74	2	22351-050010	PIN, SPRING 5.0X10	2							
75	2	24101-060034	BEARING, BALL 6003	1							
76	2	24101-063034	BEARING, BALL 6303	1							
77	2	24316-000150	O-RING, 4DP15.0	3							
78	2	26022-050122	SCREW, M5X12	8							
79	2	26022-060162	SCREW, M6X16	4							
80	2	26106-050102	BOLT, M5X 10 PLATED	3							
84	2	119125-52000	PUMP ASSY, FUEL FEED	1							
85	2	129155-52051	GASKET	1							
86	2	22217-060000	WASHER, SPRING 6	2							

N:Old ←Yes/No→ New. Q:Old ←No/Yes→ New. R:Old ←Yes/Yes→ New. S:Old ←No/No→ New. W:Add. Z:Discontinued. F:Interchangeable by set. K:Q'ty Change

++ CONTINUE ++

Copyright (C) YANMAR CO., LTD. All RightsReserved.

Fig.10. FUEL INJECTION PUMP

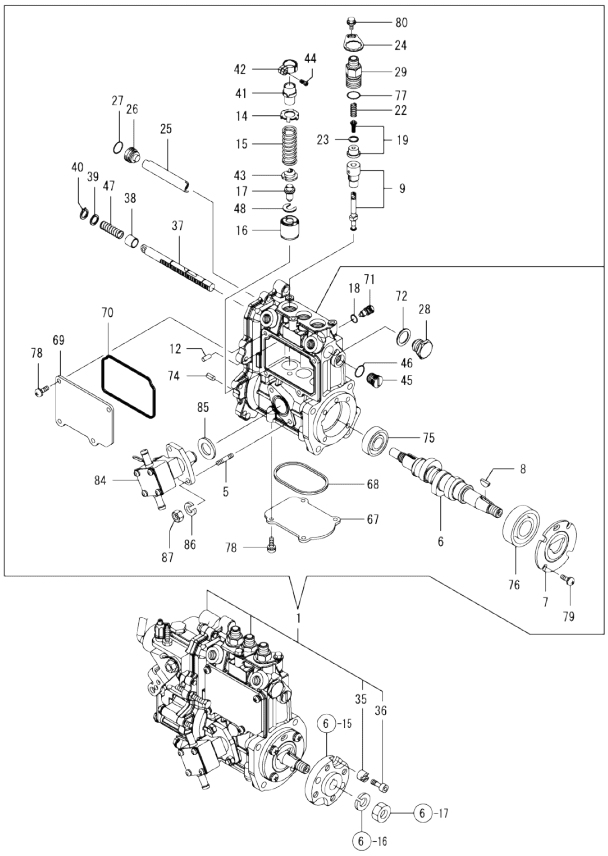

Remarks
(1) GOVERNOR ASSY(FIG.11) IS INCORPORATED IN THIS FOP.CMP (REF.NO.1).

(A)=3TNM68-HGEP (D)=
(B)= (E)=
(C)= (F)=

No.	Lev.	Parts No.	Description	Q'ty (A)	(B)	(C)	(D)	(E)	(F)	I	R
87	2	26716-060002	NUT, M6	2							

N:Old ←Yes/No→ New. Q:Old ←No/Yes→ New. R:Old ←Yes/Yes→ New. S:Old ←No/No→ New. W:Add. Z:Discontinued. F:Interchangeable by set. K:Q'ty Change

Copyright (C) YANMAR CO., LTD. All RightsReserved.

Fig.11. GOVERNOR

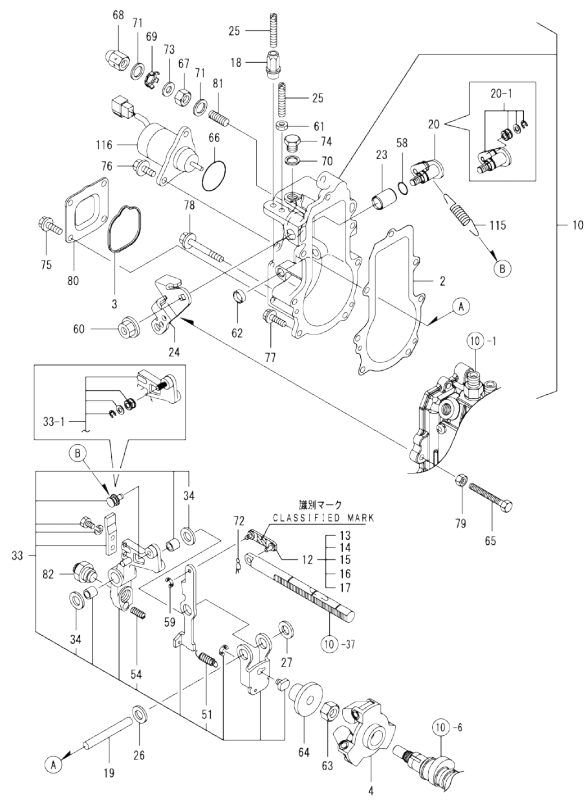

Remarks
(1) SELECTIVE PARTS;CERTAIN THE CLASSIFICATION MARK,THEN PLACE YOUR ORDER.(REF.TO.ILLUSTRATION).
* THIS FIGURE(GOVERNOR ASSY)IS INCORPORATED IN THE FUEL INJECTION PUMP ASSY(FIG.10).

(A)=3TNM68-HGEP (D)=
(B)= (E)=
(C)= (F)=

No.	Lev.	Parts No.	Description	Q'ty (A)	(B)	(C)	(D)	(E)	(F)	I	R
2	2	119717-61050	GASKET	1							
3	2	119717-61070	GASKET	1							
4	2	119125-61200	WEIGHT ASSY,GOVERNOR	1							
10	2	119128-61200	CASE ASSY, GOVERNOR	1							
12	3	119125-61110	LINK ASSY	1							
13	4	119125-61120	LINK, MARK 93	1							1
14	4	119125-61130	LINK, MARK 98	1							1
15	4	119125-61140	LINK, MARK 88	1							1
16	4	119125-61150	LINK, MARK 00	1							1
17	4	119125-61160	LINK, MARK 03	1							1
18	3	129209-61370	NUT, M6	1							
19	3	119125-61390	SHAFT	1							
20	3	119125-61400	SHAFT ASSY	1							
20-1	3	119125-61401	SHAFT ASSY	1						N	
	(A=*2009.05.)										
23	3	119125-61430	BUSH	1							
24	3	119546-61440	LEVER, CONTROL	1							
25	3	129155-61450	BOLT, LIMITER	2							
26	3	129156-61460	SHIM, T=0.6	1							
27	3	129155-61480	SPACER ASSY	1							
33	3	119025-61500	LEVER ASSY, GOVERNOR	1							
33-1	3	119025-61501	LEVER ASSY, GOVERNOR	1						N	
	(A=*2009.05.)										
34	4	174307-51700	SHIM SET	2							
51	4	129486-61540	SPRING, SET	1							
54	4	129100-61650	SPRING, CONTROLLER	1							
58	3	129155-61830	O-RING, S10	1							
59	3	22272-000030	RING, E- 3	1							
60	3	26366-080002	NUT, M8	1							
61	3	26756-060002	NUT, LOCK M6	1							
62	3	27260-120000	PLUG, 12	1							
63	2	129008-61301	NUT	1							
64	2	129155-61341	SLEEVE	1							
65	2	129155-61460	BOLT, IDLE	1							
66	2	158552-61900	O-RING	1							
67	2	129209-61920	NUT, ARB	1							
68	2	129209-61930	NUT, CAP	1							
69	2	129209-61970	PLATE	1							
70	2	22190-100002	WASHER, SEAL 10	1							
71	2	22190-120002	WASHER, SEAL 12	2							
72	2	22372-040000	PIN, SNAP 4	1							
73	2	23414-120016	GASKET, 12X1.0	1							
74	2	23887-100002	PLUG, 10	1							
75	2	26106-060102	BOLT, M6X 10 PLATED	4							
76	2	26106-060142	BOLT, M6X 14 PLATED	2							
77	2	26106-060202	BOLT, M6X 20 PLATED	4							
78	2	26106-060452	BOLT, M6X 45 PLATED	3							
79	2	26756-060002	NUT, LOCK M6	1							
80	2	119717-61060	COVER, GOVERNOR CASE	1							
81	2	129155-61470	BOLT, CONTROL	1							
82	2	119761-61560	ANGLEICH ASSY	1							

N:Old ←Yes/No→ New. Q:Old ←No/Yes→ New. R:Old ←Yes/Yes→ New. S:Old ←No/No→ New. W:Add. Z:Discontinued. F:Interchangeable by set. K:Q'ty Change

++ CONTINUE ++

Copyright (C) YANMAR CO., LTD. All RightsReserved.

Fig.11. GOVERNOR

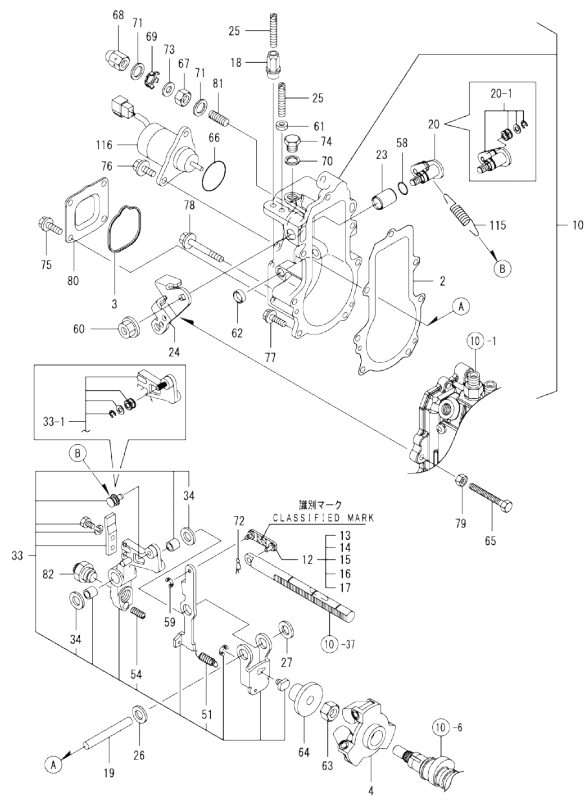

Remarks
(1) SELECTIVE PARTS;CERTAIN THE CLASSIFICATION MARK,THEN PLACE YOUR ORDER.(REF.TO.ILLUSTRATION).
* THIS FIGURE(GOVERNOR ASSY)IS INCORPORATED IN THE FUEL INJECTION PUMP ASSY(FIG.10).

(A)=3TNM68-HGEP (D)=
(B)= (E)=
(C)= (F)=

No.	Lev.	Parts No.	Description	Q'ty (A)	(B)	(C)	(D)	(E)	(F)	I	R
115	2	129573-61700	SPRING, GOVERNOR	1							
116	2	119653-77950	SOLENOID, STOP	1							

N:Old ←Yes/No→ New. Q:Old ←No/Yes→ New. R:Old ←Yes/Yes→ New. S:Old ←No/No→ New. W:Add. Z:Discontinued. F:Interchangeable by set. K:Q'ty Change

Copyright (C) YANMAR CO., LTD. All RightsReserved.

Fig.12. FUEL INJECTION VALVE

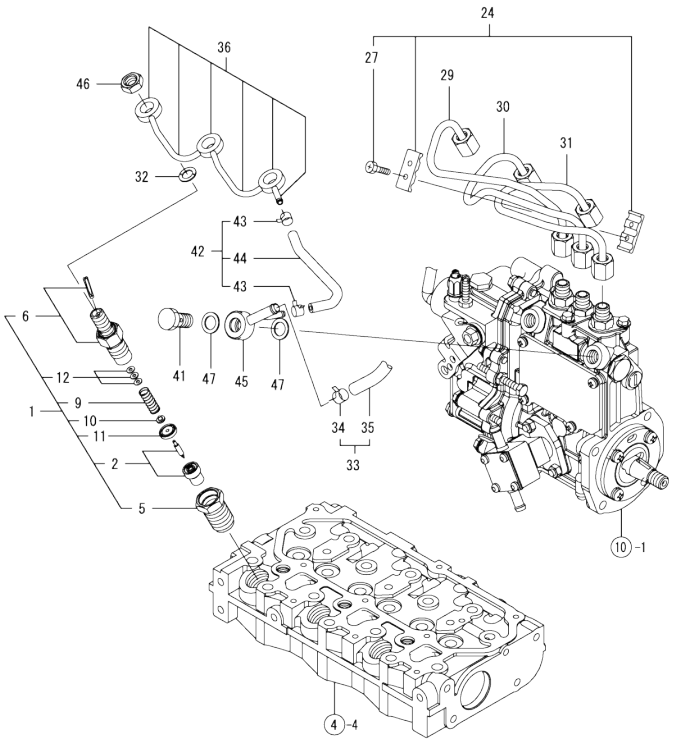

(A)=3TNM68-HGEP (D)=
(B)= (E)=
(C)= (F)=

No.	Lev.	Parts No.	Description	Q'ty (A)	(B)	(C)	(D)	(E)	(F)	I	R
1	1	719125-53100	VALVE ASSY,INJECTION	3							
2	2	119125-53001	VALVE ASSY,INJECTION	3							
5	2	119125-53080	NUT, NOZZLE	3							
6	2	119125-53100	HOLDER ASSY, NOZZLE	3							
9	2	119125-53120	SPRING, NOZZLE	3							
10	2	119125-53130	SEAT, SPRING	3							
11	2	119125-53140	SPACER, VALVE STOP	3							
12	2	114250-53400	SHIM SET	3							
24	1	129150-59120	RETAINER, PIPE	1							
27	2	129150-59131	BOLT, M4X14	2							
29	1	119125-59810	PIPE, FUEL INJECTION	1							
30	1	119125-59820	PIPE, FUEL INJECTION	1							
31	1	119125-59830	PIPE, FUEL INJECTION	1							
32	1	119125-53800	GASKET	3							
32-1	1	129901-59560	GASKET	3							N
	(A=*2008.12.)										
33	1	129210-59140	PIPE ASSY, FUEL	1							
33-1	1	129210-59120	PIPE ASSY, FUEL	1							N
	(A=*2009.06.)										
34	2	124766-59050	CLIP, HOSE 12	2							
35	2	105230-59510	PIPE, FUEL	1							
35-1	2	129211-59510	PIPE, FUEL L=325	1							N
	(A=*2009.06.)										
36	1	119125-59540	PIPE ASSY, RETURN	1							
41	1	119125-59560	BOLT, PIPE JOINT	1							
42	1	119515-59570	PIPE ASSY, RETURN	1							
42-1	1	119125-59570	PIPE ASSY, RETURN	1							N
	(A=*2008.12.)										
43	2	124066-59100	CLIP, HOSE 8	2							
44	2	105225-59240	PIPE, FUEL	1							
44-1	2	119000-59550	PIPE, FUEL RETURN	1							N
	(A=*2008.12.)										
45	1	119125-59580	JOINT, OVER FLOW	1							
45-1	1	119840-59570	JOINT	1							N
	(A=*2008.12.)										
46	1	119620-59700	NUT, NOZZLE	3							
47	1	22190-120002	WASHER, SEAL 12	2							

N:Old $\frac{\text{Yes}}{\text{No}}$ New. Q:Old $\frac{\text{No}}{\text{Yes}}$ New. R:Old $\frac{\text{Yes}}{\text{Yes}}$ New. S:Old $\frac{\text{No}}{\text{No}}$ New. W:Add. Z:Discontinued. F:Interchangeable by set. K:Q'ty Change

Copyright (C) YANMAR CO., LTD. All RightsReserved.

Fig.13. FUEL LINE

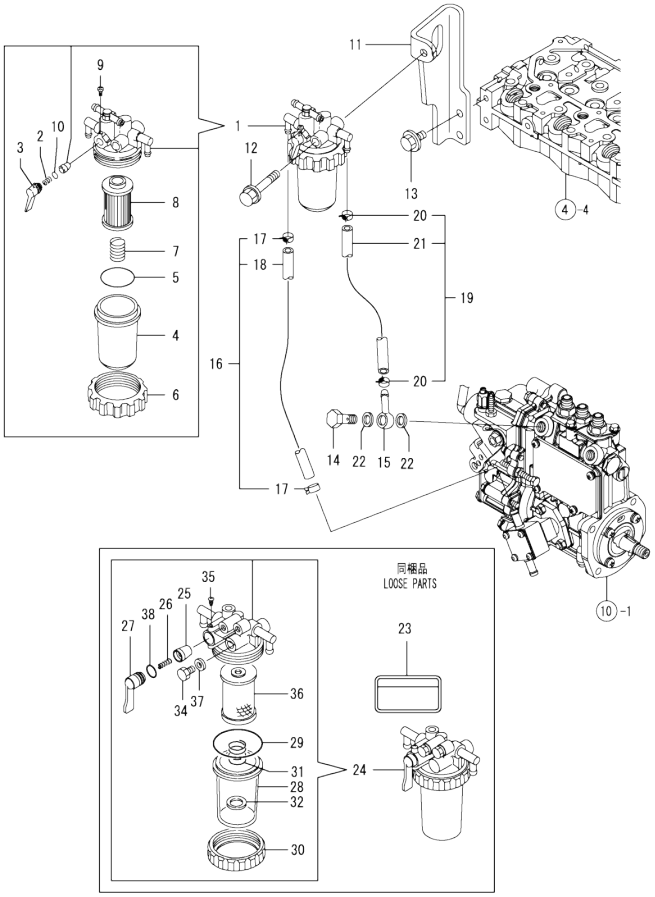

(A)=3TNM68-HGEP (D)=
(B)= (E)=
(C)= (F)=

No.	Lev.	Parts No.	Description	Q'ty (A)	(B)	(C)	(D)	(E)	(F)	I	R
1	1	119833-55620	FILTER ASSY, FUEL	1							
2	2	104200-55330	SPRING, VALVE	1							
3	2	119810-55340	LEVER	1							
4	2	121254-55510	COVER	1							
5	2	102103-55520	O-RING	1							
6	2	110250-55610	RING, RETAINING	1							
7	2	121250-55620	SPRING	1							
8	2	119810-55650	ELEMENT	1							
9	2	104200-55750	SCREW, M4	1							
10	2	24311-240100	O-RING, 1AP10A	1							
11	1	119128-55650	BRACKET	1							
11-1	1	119128-55651	BRACKET	1							S
	(A=*2009.06.)										
12	1	26014-080702	BOLT, M8X 70	1							
13	1	26106-080162	BOLT, M8X 16 PLATED	2							
14	1	103854-39140	BOLT, PIPE JOINT	1							
15	1	101304-59020	JOINT, PIPE 12	1							
16	1	129210-59140	PIPE ASSY, FUEL	1							
16-1	1	129210-59120	PIPE ASSY, FUEL	1							N
	(A=*2009.06.)										
17	2	124766-59050	CLIP, HOSE 12	2							
18	2	105230-59510	PIPE, FUEL	1							
18-1	2	129211-59510	PIPE, FUEL L=325	1							N
	(A=*2009.06.)										
19	1	129210-59230	PIPE ASSY, FUEL	1							
19-1	1	129210-59030	PIPE ASSY, FUEL	1							N
	(A=*2009.06.)										
20	2	124766-59050	CLIP, HOSE 12	2							
21	2	129555-59511	PIPE, FUEL	1							
21-1	2	129150-59511	PIPE, FUEL	1							N
	(A=*2009.06.)										
22	1	22190-120002	WASHER, SEAL 12	2							
23	1	114110-07760	LABEL, FUEL CAUTION	1							
24	1	129335-55700	SEPARATOR ASSY,WATER	1							
25	2	104200-55321	VALVE, TAPER	1							
26	2	104200-55330	SPRING, VALVE	1							
27	2	104200-55341	HANDLE	1							
28	2	124064-55510	COVER	1							
29	2	102103-55520	O-RING	1							
30	2	110250-55610	RING, RETAINING	1							
31	2	121257-55720	SPRING	1							
32	2	121257-55731	FLOAT	1							
34	2	101720-55750	PLUG, 6	2							
35	2	104200-55750	SCREW, M4	1							
36	2	171081-55910	SCREEN	1							
37	2	23418-060000	GASKET, 6X1.0	2							
38	2	24311-240100	O-RING, 1AP10A	1							

N:Old ←Yes/No→ New. Q:Old ←No/Yes→ New. R:Old ←Yes/Yes→ New. S:Old ←No/No→ New. W:Add. Z:Discontinued. F:Interchangeable by set. K:Q'ty Change

Copyright (C) YANMAR CO., LTD. All RightsReserved.

Fig.14. STARTING MOTOR

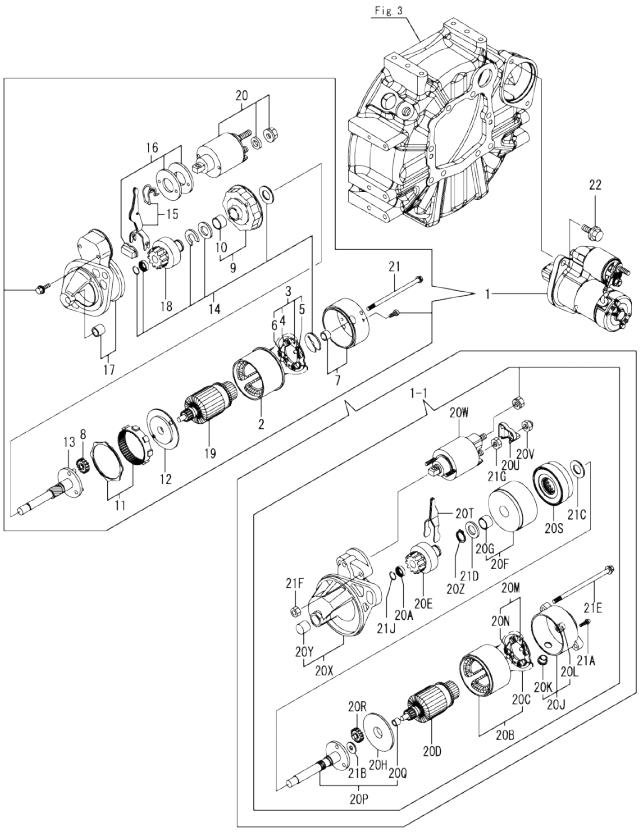

Remarks
(1)Fig.3 No.2-1 & Fig.7 No.8-1 interchangeable by set.

(A)=3TNM68-HGEP (D)=
(B)= (E)=
(C)= (F)=

No.	Lev.	Parts No.	Description	Q'ty (A)	(B)	(C)	(D)	(E)	(F)	I	R
1	1	119125-77010	STARTER ASSY, 1.2KW	1							
1-1	1	119515-77010	STARTER, P1.0	1						F	1
	(A=E023888)										
2	2	129698-77110	YOKE ASSY	1						Z	
	(A=E023888)										
3	2	129698-77120	HOLDER ASSY, BRUSH	1						Z	
	(A=E023888)										
4	3	129698-77130	BRUSH	2						Z	
	(A=E023888)										
5	3	129698-77140	BRUSH SET	1						Z	
	(A=E023888)										
6	3	129698-77150	SPRING, BRUSH	4						Z	
	(A=E023888)										
7	2	129698-77161	COVER ASSY, STARTER	1						Z	
	(A=E023888)										
8	2	119125-77170	GEAR, PLANETARY	3						Z	
	(A=E023888)										
9	2	129698-77180	BRACKET, CENTER P	1						Z	
	(A=E023888)										
10	3	129698-77190	BRACKET, CENTER	1						Z	
	(A=E023888)										
11	2	119125-77200	GEAR, INTERNAL	1						Z	
	(A=E023888)										
12	2	119125-77210	BRACKET, CENTER A	1						Z	
	(A=E023888)										
13	2	119125-77230	SHAFT, PINION	1						Z	
	(A=E023888)										
14	2	129698-77250	WASHER SET	1						Z	
	(A=E023888)										
15	2	119125-77270	LEVER SET, SHIFT	1						Z	
	(A=E023888)										
16	2	119125-77280	COVER KIT, DUST	1						Z	
	(A=E023888)										
17	2	119125-77520	CASE ASSY, GEAR	1						Z	
	(A=E023888)										
18	2	119125-77660	PINION ASSY	1						Z	
	(A=E023888)										
19	2	119125-77710	ARMATURE ASSY	1						Z	
	(A=E023888)										
20	2	119125-77760	SWITCH ASSY, MAGNET	1						Z	
	(A=E023888)										
20A	2	X0280210331	NUT	1						W	
	(A=E023888)										
20B	2	X0281007680	YOKE ASSY	1						W	
	(A=E023888)										
20C	3	X0280996180	STARTER KIT	2						W	
	(A=E023888)										
20D	2	X0282005871	ARMATURE ASSY	1						W	
	(A=E023888)										
20E	2	X0283006960	CLUTCH	1						W	
	(A=E023888)										

N:Old ←Yes/No→ New, Q:Old ←No/Yes→ New, R:Old ←Yes/Yes→ New, S:Old ←No/No→ New, W:Add, Z:Discontinued, F:Interchangeable by set, K:Q'ty Change

++ CONTINUE ++

Copyright (C) YANMAR CO., LTD. All RightsReserved.

Fig.14. STARTING MOTOR

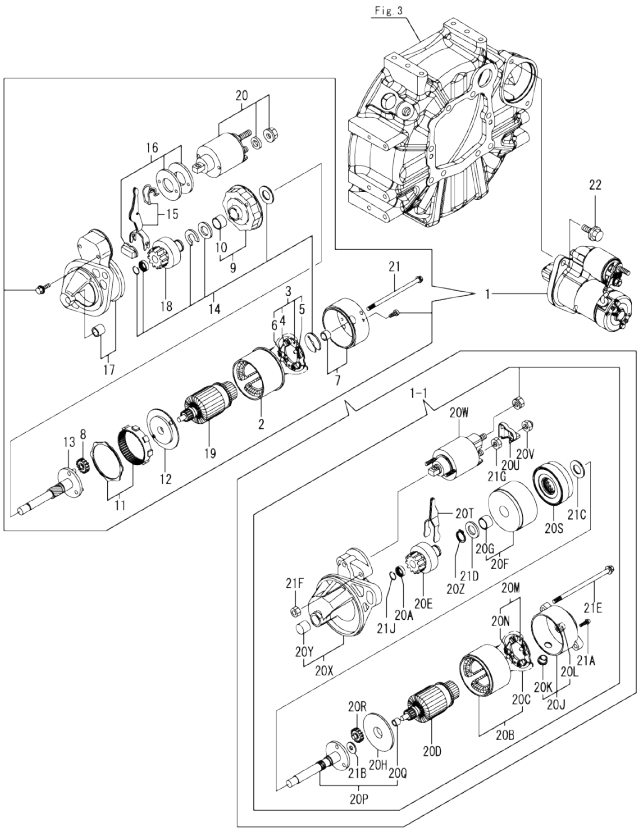

(A)=3TNM68-HGEP
(B)=
(C)=
(D)=
(E)=
(F)=

No.	Lev.	Parts No.	Description	Q'ty (A)	(B)	(C)	(D)	(E)	(F)	I	R
20F	2	X0284105040	BEARING ASSY, SUB	1						W	
	(A=E023888)										
20G	3	X9491034330	BEARING	1						W	
	(A=E023888)										
20H	2	X0284525010	PLATE	1						W	
	(A=E023888)										
20J	2	X0285007030	FRAME ASSY	1						W	
	(A=E023888)										
20K	3	X0280626010	COVER	1						W	
	(A=E023888)										
20L	3	X9491040990	BEARING	1						W	
	(A=E023888)										
20M	2	X0285105190	HOLDER ASSY	1						W	
	(A=E023888)										
20N	3	X0285205030	SPRING	4						W	
	(A=E023888)										
20P	2	X0286105010	SHAFT ASSY, SUB	1						W	
	(A=E023888)										
20Q	3	X9491034320	BEARING	1						W	
	(A=E023888)										
20R	2	X0286305010	GEAR	3						W	
	(A=E023888)										
20S	2	X0286355010	GEAR	1						W	
	(A=E023888)										
20T	2	X0287405140	LEVER	1						W	
	(A=E023888)										
20U	2	X1280330020	COVER, TERMINAL	1						W	
	(A=E023888)										
20V	2	X1289510130	NUT	1						W	
	(A=E023888)										
20W	2	X2534000090	SWITCH ASSY	1						W	
	(A=E023888)										
20X	2	X4284001590	HOUSING ASSY	1						W	
	(A=E023888)										
20Y	3	X9491050100	BEARING, NEEDLE	1						W	
	(A=E023888)										
20Z	2	X9055715000	RING	1						W	
	(A=E023888)										
21	2	124195-77770	BOLT, THROUGH	2						Z	
	(A=E023888)										
21A	2	X9490065670	SCREW, M4X6	2						W	
	(A=E023888)										
21B	2	X9490138090	WASHER	1						W	
	(A=E023888)										
21C	2	X9490138100	WASHER	1						W	
	(A=E023888)										
21D	2	X9490138110	WASHER	1						W	
	(A=E023888)										
21E	2	X9490423520	BOLT, THROUGH	2						W	
	(A=E023888)										
21F	2	X9490560750	NUT	2						W	

Remarks
(1)Fig.3 No.2-1 & Fig.7 No.8-1 interchangeable by set.

N:Old ←Yes/No→ New. Q:Old ←No/Yes→ New. R:Old ←Yes/Yes→ New. S:Old ←No/No→ New. W:Add. Z:Discontinued. F:Interchangeable by set. K:Q'ty Change

++ CONTINUE ++

Copyright (C) YANMAR CO., LTD. All RightsReserved.

Fig.14. STARTING MOTOR

(A)=3TNM68-HGEP
(B)=
(C)=
(D)=
(E)=
(F)=

No.	Lev.	Parts No.	Description	Q'ty (A)	(B)	(C)	(D)	(E)	(F)	I	R
21G	(A=E023888) 2	X9490562360	NUT	1						W	
21J	(A=E023888) 2	X9490721360	RING	1						W	
22	(A=E023888) 1	26106-100252	BOLT, M10X 25 PLATED	2							

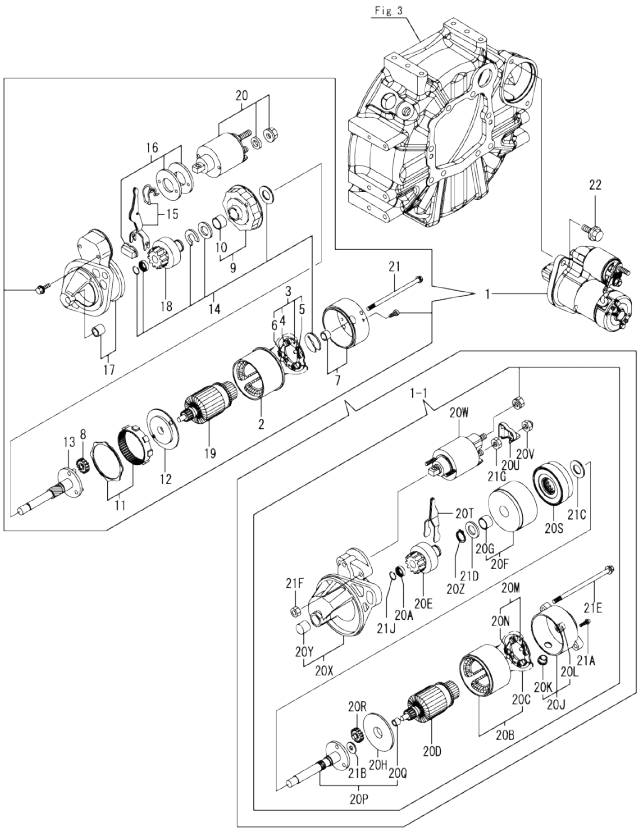

Remarks
(1)Fig.3 No.2-1 & Fig.7 No.8-1 interchangeable by set.

N:Old ←Yes/No→ New. Q:Old ←No/Yes→ New. R:Old ←Yes/Yes→ New. S:Old ←No/No→ New. W:Add. Z:Discontinued. F:Interchangeable by set. K:Q'ty Change

Copyright (C) YANMAR CO., LTD. All RightsReserved.

Fig.15. GENERATOR

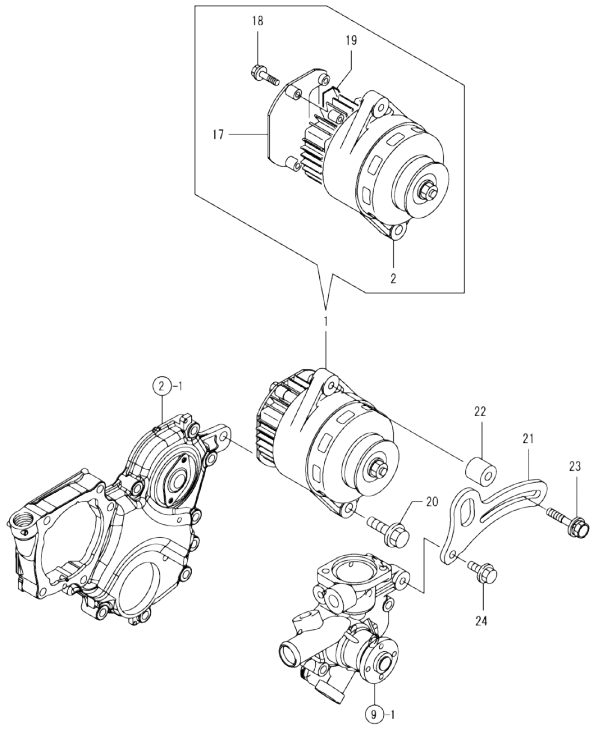

Remarks
*This item is applicable to [(A)=EXXXXX-1] or previous machines. Refer to Fig.18.

(A)=3TNM68-HGEP (D)=
(B)= (E)=
(C)= (F)=

No.	Lev.	Parts No.	Description	Q'ty (A)	(B)	(C)	(D)	(E)	(F)	I	R
1	1	119128-77200	GENERATOR, 12V-40A	1							
2	2	119128-77220	GENERATOR ASSY	1							
17	2	119128-77370	COVER	1							
18	2	119128-77380	BOLT, FLANGE	4							
19	2	119128-77390	COVER	1							
20	1	26106-100402	BOLT, M10X 40 PLATED	1							
21	1	119125-77330	ADJUSTER	1							
21-1	1	119125-77310	ADJUSTER	1						N	
	(A=*2009.04.)										
21-2	1	119125-77320	ADJUSTER	1						N	
	(A=*2009.06.)										
22	1	124732-77340	SPACER	1							
23	1	129972-77341	BOLT, ADJUSTER L=50	1							
24	1	26106-080202	BOLT, M8X 20 PLATED	1							

N:Old ←Yes/No→ New. Q:Old ←No/Yes→ New, R:Old ←Yes/Yes→ New, S:Old ←No/No→ New, W:Add, Z:Discontinued, F:Interchangeable by set, K:Q'ty Change

Copyright (C) YANMAR CO., LTD. All RightsReserved.

Fig.17. (15A)GENERATOR

(A)=3TNM68-HGEP
(B)=
(C)=
(D)=
(E)=
(F)=

No.	Lev.	Parts No.	Description	Q'ty (A)	(B)	(C)	(D)	(E)	(F)	I	R
1	1	129423-77200	GENERATOR, 12V-40A	1							
2	2	X9490561001	NUT	1							
3	2	119620-77380	ROTOR ASSY	1							
4	3	123501-79240	BEARING, BALL	1							
5	3	119620-79250	COVER	1							
6	2	119620-77421	FRAME ASSY, DRIVE	1							
7	3	119620-79200	BEARING, BALL	1							
8	3	119620-79210	PLATE, RETAINER	1							
9	3	119620-79220	SCREW	4							
10	3	119620-79230	STUD	2							
11	2	119620-77440	FRAME ASSY	1							
12	2	129240-79300	COVER	1							
13	2	119620-77461	PULLEY	1							
14	2	119620-77471	NUT	1							
15	2	119620-77490	COLLAR	1							
16	2	129423-77710	REGULATOR ASSY	1							
17	2	119620-79260	HOLDER	1							
18	2	129052-79270	HOLDER, BRUSH	1							
19	3	119620-77480	BRUSH ASSY	2							
20	3	119620-79280	SPRING	2							
21	2	119620-79290	SCREW	6							
22	2	119620-79300	SCREW	1							
23	2	119620-79310	BOLT	3							
24	2	119620-79320	SCREW	2							
25	2	119620-79330	BOLT	2							
26	2	119620-79340	BUSH, INSULATION	1							
27	2	119620-79350	NUT	2							
28	2	119620-79360	WASHER, THRUST	1							
29	1	26106-100402	BOLT, M10X 40 PLATED	1							
30	1	119125-77320	ADJUSTER	1							
31	1	124732-77340	SPACER	1							
32	1	129972-77341	BOLT, ADJUSTER L=50	1							
33	1	26106-080202	BOLT, M8X 20 PLATED	1							

Remarks
*This item is applicable to [(A)=EXXXXX] or following machines. Refer to Fig.15.

N:Old $\frac{\text{Yes}}{\text{No}}$ New. Q:Old $\frac{\text{No}}{\text{Yes}}$ New. R:Old $\frac{\text{Yes}}{\text{Yes}}$ New. S:Old $\frac{\text{No}}{\text{No}}$ New. W:Add. Z:Discontinued. F:Interchangeable by set. K:Q'ty Change

Copyright (C) YANMAR CO., LTD. All RightsReserved.

Fig.16. GASKET SET

(A)=3TNM68-HGEP
(B)=
(C)=
(D)=
(E)=
(F)=

No.	Lev.	Parts No.	Description	Q'ty (A)	(B)	(C)	(D)	(E)	(F)	I	R
1	1	119125-92600	GASKET SET	1							1
2	2	119125-01330	GASKET, HEAD	1							
3	2	119125-01790	GASKET	1							
4	2	119125-11330	GASKET	1							
5	2	119125-11340	SEAL, VALVE STEM	6							
6	2	119125-11370	GASKET, BONNET	1							
7	2	129901-11450	PROTECTOR, NOZZLE	3							
8	2	119600-11460	GASKET, NOZZLE	6							
9	2	119125-13110	GASKET	1							
10	2	119515-13200	GASKET, SILENCER	1							
11	2	129900-32040	O-RING, P14	1							
12	2	119125-34900	O-RING	1							
13	2	119209-35030	O-RING, P11	1							
14	2	119125-39220	GASKET	1							
15	2	119260-42021	GASKET, WATER PUMP	1							
16	2	119275-42020	GASKET, WATER PUMP	1							
17	2	119125-42030	GASKET, WATER PUMP	1							
18	2	119209-42320	O-RING, P21 EPDM	1							
19	2	124465-44950	GASKET, 16	1							
20	2	119125-51800	GASKET	1							
21	2	129901-59560	GASKET	3							
22	2	22190-120002	WASHER, SEAL 12	5							
23	2	22190-160002	WASHER, SEAL 16	1							
24	2	23414-080000	GASKET, 8X1.0	1							
25	2	24311-000180	O-RING, 1AP18.0	2							
26	1	129400-92400	HONE	1							1
27	1	977770-1207F	GASKET.LIQUID	1							1

Remarks
(1) OPTIONAL PART.

N:Old $\xleftarrow[\text{No}]{\text{Yes}}$ New. Q:Old $\xleftarrow[\text{Yes}]{\text{No}}$ New. R:Old $\xleftarrow[\text{Yes}]{\text{Yes}}$ New. S:Old $\xleftarrow[\text{No}]{\text{No}}$ New. W:Add. Z:Discontinued. F:Interchangeable by set. K:Q'ty Change

Copyright (C) YANMAR CO., LTD. All RightsReserved.

Parts No. Index

Parts No.	Fig. No.	Ref. No.
101304-59020	13	15
101720-55750	13	34
102103-55520	13	5
		29
103854-39140	13	14
104200-55321	13	25
104200-55330	13	2
		26
104200-55341	13	27
104200-55750	13	9
		35
105010-11230	4	29
105225-59240	12	44
105230-59510	12	35
	13	18
105425-01690	3	7
106760-01770	2	6
	4	34
110250-55610	13	6
		30
114110-07760	13	23
114220-07130	5	8
114250-39450	8	14
114250-53400	12	12
118400-51370	10	24
119000-59550	12	44 -1
119025-61500	11	33
119025-61501	11	33 -1
119125-01330	1	30
	16	2
119125-01500	2	1
119125-01540	2	1 -1
119125-01750	2	2
119125-01760	3	6
119125-01780	3	11
119125-01790	1	31
	16	3
119125-01800	1	35 -1
119125-01960	1	7
119125-01970	1	5
119125-02000	1	6
119125-02061	1	9
119125-02900	1	36
119125-02910	1	42
119125-02930	1	23
119125-02940	1	39
119125-11100	4	13
119125-11110	4	14
119125-11130	4	15
119125-11180	4	16

Parts No.	Fig. No.	Ref. No.
119125-11190	4	17
119125-11200	4	20
119125-11240	4	21
119125-11260	4	24
119125-11270	4	25
119125-11320	4	45
119125-11330	4	46
	16	4
119125-11340	4	18
	16	5
119125-11370	4	47
	16	6
119125-11380	4	35
119125-11650	4	28
119125-11740	4	4
119125-11800	4	19
119125-13110	5	1
	16	9
119125-13140	5	2
119125-14580	6	3
119125-21200	7	4
119125-21650	7	11
119125-21700	7	1
119125-22080	7	15
119125-22300	7	21
119125-22500	7	17
119125-22550	7	32
119125-22900	7	30
119125-23000	7	23
119125-25050	1	26
119125-25100	6	9
119125-25910	6	12
119125-25930	6	14
119125-32000	8	1
119125-34810	8	3
119125-34820	8	4
119125-34900	8	5
	16	12
119125-39200	8	11
119125-39220	8	12
	16	14
119125-42000	9	1
119125-42020	9	3
119125-42030	9	4
	16	17
119125-51030	10	6
119125-51060	10	7
119125-51100	10	9
119125-51241	10	16
119125-51250	10	17

Parts No.	Fig. No.	Ref. No.
119125-51300	10	19
119125-51480	10	35
119125-51490	10	36
119125-51700	10	67
119125-51800	1	34
	16	20
119125-52000	10	84
119125-53001	12	2
119125-53080	12	5
119125-53100	12	6
119125-53120	12	9
119125-53130	12	10
119125-53140	12	11
119125-53800	12	32
119125-59540	12	36
119125-59560	12	41
119125-59570	12	42 -1
119125-59580	12	45
119125-59810	12	29
119125-59820	12	30
119125-59830	12	31
119125-61110	11	12
119125-61120	11	13
119125-61130	11	14
119125-61140	11	15
119125-61150	11	16
119125-61160	11	17
119125-61200	11	4
119125-61390	11	19
119125-61400	11	20
119125-61401	11	20 -1
119125-61430	11	23
119125-77010	14	1
119125-77170	14	8
119125-77200	14	11
119125-77210	14	12
119125-77230	14	13
119125-77270	14	15
119125-77280	14	16
119125-77310	15	21 -1
119125-77320	15	21 -2
	17	30
119125-77330	15	21
119125-77520	14	17
119125-77660	14	18
119125-77710	14	19
119125-77760	14	20
119125-77800	4	54
119125-77820	4	55
119125-92600	16	1

Parts No.	Fig. No.	Ref. No.
119127-01560	1	1
119128-01670	3	2
119128-21591	7	8
119128-35080	8	9
119128-55650	13	11
119128-55651	13	11 -1
119128-61200	11	10
119128-77200	15	1
119128-77220	15	2
119128-77370	15	17
119128-77380	15	18
119128-77390	15	19
119131-18320	5	5
119209-35030	8	8
	16	13
119209-42320	9	9
	16	18
119260-11270	4	26
119260-11280	4	27
119260-11370	4	1
119260-14200	6	1
119260-14400	6	2
119260-23910	7	29
119260-42021	9	12
	16	15
119265-44740	9	18
119266-01200	1	29
119275-42020	16	16
119305-35170	8	7
119515-13200	5	7
	16	10
119515-23601	7	27
119515-23611	7	36
119515-59570	12	42
119515-77010	14	1 -1
119546-61440	11	24
119600-11460	4	3
	16	8
119620-01620	1	13
119620-01750	3	3
119620-21941	7	13
119620-59700	12	46
119620-77380	17	3
119620-77421	17	6
119620-77440	17	11
119620-77461	17	13
119620-77471	17	14
119620-77480	17	19
119620-77490	17	15
119620-79200	17	7

Parts No. Index

Parts No.	Fig. No.	Ref. No.
119620-79210	17	8
119620-79220	17	9
119620-79230	17	10
119620-79250	17	5
119620-79260	17	17
119620-79280	17	20
119620-79290	17	21
119620-79300	17	22
119620-79310	17	23
119620-79320	17	24
119620-79330	17	25
119620-79340	17	26
119620-79350	17	27
119620-79360	17	28
119621-21680	7	12
119653-77950	11	116
119717-01800	2	3
119717-03031	4	36
119717-03070	4	37
		38
119717-13600	5	3
119717-23200	7	26
119717-49800	9	22
119717-51150	6	15
119717-51190	10	15
119717-51420	10	27
119717-51500	10	37
119717-51570	10	43
119717-51711	10	68
119717-51750	10	69
119717-51761	10	70
119717-61050	11	2
119717-61060	11	80
119717-61070	11	3
119734-02220	1	32
119740-42350	9	16
119761-61560	11	82
119802-03100	4	39
119802-03110	4	40
119802-03121	4	41
119802-03131	4	42
119802-03141	4	43
119802-13620	5	4
119810-55340	13	3
119810-55650	13	8
119833-55620	13	1
119840-59570	12	45 -1
119865-21600	7	10
119888-01850	3	2 B
		4 -1

Parts No.	Fig. No.	Ref. No.
119888-01850	3	4 -2
119D00-01610	3	2 -1
119D00-21580	7	8 -1
121023-01551	2	8
121111-21501	7	7
121250-44901	9	27
121250-55620	13	7
121254-55510	13	4
121257-55720	13	31
121257-55731	13	32
121450-42450	9	26
122710-51090	10	8
123501-79240	17	4
124060-01050	1	4
124064-55510	13	28
124066-59100	12	43
124101-49531	9	21
124195-77770	14	21
124465-44950	9	28
		29
	16	19
124550-51350	10	23
124732-77340	15	22
	17	31
124766-59050	12	34
	13	17
		20
128990-51330	10	22
129008-61301	11	63
129052-79270	17	18
129100-01580	3	1
	7	2
129100-35140	8	6
129100-51560	10	42
129100-51570	10	44
129100-61650	11	54
129150-25301	6	13
129150-59120	12	24
129150-59131	12	27
129150-59511	13	21 -1
129155-51020	10	5
129155-51140	10	12
129155-51280	10	18
129155-51400	10	25
129155-51521	10	38
129155-51530	10	39
129155-51540	10	40
129155-51550	10	41
129155-51580	10	46
129155-51591	10	47

Parts No.	Fig. No.	Ref. No.
129155-51600	10	48
129155-52051	10	85
129155-61341	11	64
129155-61450	11	25
129155-61460	11	65
129155-61470	11	81
129155-61480	11	27
129155-61830	11	58
129156-61460	11	26
129209-61370	11	18
129209-61920	11	67
129209-61930	11	68
129209-61970	11	69
129210-59030	13	19 -1
129210-59120	12	33 -1
	13	16 -1
129210-59140	12	33
	13	16
129210-59230	13	19
129211-59510	12	35 -1
	13	18 -1
129240-79300	17	12
129335-55700	13	24
129400-92400	16	26
129423-77200	17	1
129423-77710	17	16
129457-44760	9	19
129486-35210	3	4
129486-61540	11	51
129555-59511	13	21
129573-61700	11	115
129698-77110	14	2
129698-77120	14	3
129698-77130	14	4
129698-77140	14	5
129698-77150	14	6
129698-77161	14	7
129698-77180	14	9
129698-77190	14	10
129698-77250	14	14
129900-32040	1	33
	16	11
129901-11450	4	2
	16	7
129901-59560	12	32 -1
	16	21
129972-77341	15	23
	17	32
158552-61900	11	66
158600-51170	10	14

Parts No.	Fig. No.	Ref. No.
158600-51410	10	26
158600-51420	10	28
158600-51442	10	29
158600-51570	10	45
158600-51790	10	71
171056-49120	9	25
171081-55910	13	36
174307-51700	11	34
22190-100002	11	70
22190-120002	11	71
	12	47
	13	22
	16	22
22190-160002	3	10
	10	72
	16	23
22217-060000	10	86
22217-120000	6	16
22242-000100	4	32
22252-000200	7	22
22272-000030	11	59
22351-030010	7	14
22351-050010	10	74
22351-060012	1	27
22372-040000	11	72
22512-040120	7	5
22857-500100	4	48
		49
23414-080000	9	13
	16	24
23414-120016	11	73
23418-060000	13	37
23876-005000	1	10
	4	11
23887-100002	11	74
24101-060034	10	75
24101-063034	10	76
24311-000180	2	7
	4	51
	16	25
24311-240100	13	10
		38
24316-000150	10	77
24341-000240	2	9
25132-003400	9	17
26014-080702	13	12
26022-050122	10	78
26022-060162	10	79
26106-050102	10	80
26106-060102	8	10

Parts No. Index

Parts No.	Fig. No.	Ref. No.
26106-060102	8	13
	11	75
26106-060122	6	8
26106-060142	8	2
	11	76
26106-060162	2	10
26106-060202	4	52
	11	77
26106-060402	1	28
26106-060452	9	20
	11	78
26106-060802	4	53
26106-080122	9	14
26106-080162	13	13
26106-080202	15	24
	17	33
26106-080252	9	23
26106-080352	2	4
26106-080452	2	5
	4	33
	9	15
26106-080652	9	24
26106-100252	14	22
26106-100402	15	20
	17	29
26206-100252	3	5
26306-080002	5	6
26366-080002	11	60
26450-080252	1	35
26476-060202	4	50
26577-060122	9	10
26716-060002	10	87
26716-120002	6	17
26756-060002	11	61
		79
26856-060002	4	31
27241-220000	9	11
27241-300000	1	11
27241-350000	4	12
27241-450000	1	12
27260-120000	11	62
719125-53100	12	1
719128-51300	10	1
977770-1207F	16	27
X0280210331	14	20 A
X0280626010	14	20 K
X0280996180	14	20 C
X0281007680	14	20 B
X0282005871	14	20 D
X0283006960	14	20 E

Parts No.	Fig. No.	Ref. No.
X0284105040	14	20 F
X0284525010	14	20 H
X0285007030	14	20 J
X0285105190	14	20 M
X0285205030	14	20 N
X0286105010	14	20 P
X0286305010	14	20 R
X0286355010	14	20 S
X0287405140	14	20 T
X1280330020	14	20 U
X1289510130	14	20 V
X2534000090	14	20 W
X4284001590	14	20 X
X9055715000	14	20 Z
X9490065670	14	21 A
X9490138090	14	21 B
X9490138100	14	21 C
X9490138110	14	21 D
X9490423520	14	21 E
X9490560750	14	21 F
X9490561001	17	2
X9490562360	14	21 G
X9490721360	14	21 J
X9491034320	14	20 Q
X9491034330	14	20 G
X9491040990	14	20 L
X9491050100	14	20 Y

Parts No.	Fig. No.	Ref. No.

Parts No.	Fig. No.	Ref. No.